

Analogue Weatherproof Phones KNSP-08L2D6

DESCRIPTION

1. Robust aluminium alloy die-cast body, vandal resistant and tamper-resistant hardware, simple installation.
2. Full keypad with memory, 10 button programmable speed-dial telephone.
3. Store button, pick button, redial button.
4. Door cover: orient automatically and good self - closing, convenient for use.
5. Weather resistant to IP66 standard, service temperature range from -30 degree to +75 degree.
6. Magnetic reed hook-switch.
7. Robust AC cord, AC power supply from 110V~240V.
8. Lightening protection to ITU-T recommendation K.21
9. Hearing aid compatible receiver, noise canceling microphone.
10. Handset with industrial strong curly cord, armored cable optional.
11. Optional 7 minute time out, to release the line if the handset is left off hook.
12. All of the components including keypad, buzzer, circuit board and cabinet are designed to be multi-player waterproof and dust - proof which is up to Class III grade.
13. With external 30W loud speaker.Material:metal. Impedance:8Ω. Freq.Resp:300-7000HZ. S.P.L:(1M/W):108dB. Magnet: ALum
14. With external lamp indicator. Red flash light work voltage: 12V DC/10W or powered by telephone.
15. Support a dry contact for CCTV interface.



SPECIFICATION

1. PSTN analogue telephone
2. DTMF dialing
3. MTBF:100000hours
4. MTTR: 2 hours
5. Connection: RJ11 screw terminal pair cable
6. Applicable for various types of SPC exchange PABX and dispatching exchange system with feeding voltage of 33-60V.
7. Ambient temperature:-30 ~ +60 degree. Relative humidity:10%~95%
   Atmospheric pressure: 86~106Kpa Circumstance noise:less than 60dB(A)
8. Sound level of ringing:over 70dB(A).
9. Standard frequency:low frequency group:697. 770. 852. 941Hz,
   high frequency group:1209. 1336. 1477Hz, frequency deviation:-1.5% ~ +1.5%
10. Call transmission index:(5KM)SLR<12,RLR<-1,STMR>10, output impedance is 600 Ohm.
    maximum distance: 7KM
10. Super strong function is available for dialing 12 groups of numbers stored in the memory
    (maximum length of each number is 16 digits)
11. Connection: RJ11 screw terminal pair cable (or RJ11 Socket of plug upon request)

INSTALLATION

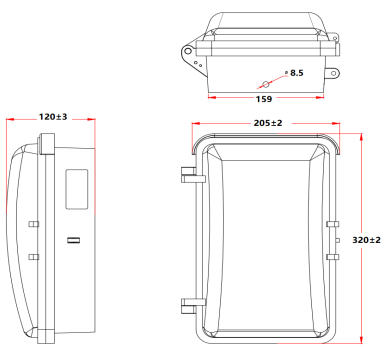



Back View



CERTIFICATION

EN55022: emissions
EN55024: immunity
Ingress Protection: GB4208-93 IP66 FCC
ITU-T Recommendations K21
EMC: EN50121(Railway application-Electromagnetic Compatibility)

CE FC IP65 RoHS

PACKAGING



Outside carton box: 58*46*45 19kg each box: 2PCS telephone 2pcs light 2pcs speaker
Inner carton box : 46*31*44 9.5kg each box: 1PCS telephone 1pcs light 1pcs speaker

KNTECH
HONGKONG KOON TECHNOLOGY LTD
TEL:0086755 29790158/27448753 Fax:0086755 29790278
Email:marketing@koontech.com www.koontech.com